OPENING

SINGLE ☐ PAIR ☐

DOUBLE ACTING ☐ DOUBLE EGRESS ☐

FIRE RATING

☐ NR
☐ 20
☐ 45
☐ 60
☐ 90

"S" Label ☐Y ☐N

Temp. Rise _____

LITE

VISIBLE GLASS (W x H) _____

OR

CUTOUT ONLY (W x H) _____

DISTANCE FROM TOP RAIL (in) _____

DISTANCE FROM LOCK STILE (in) _____

-OR- ☐ CHECK IF CENTERED

LIGHT KIT TYPE (IF TO BE PROVIDED BY CS)

NONE: ☐

METAL: *PAINTED TO MATCH* ☐

METAL: *BEIGE (PC)* ☐

WOOD: *FLUSH BEAD* ☐

METAL: *ACROVYN WRAPPED* ☐

WOOD: *LIPPED BEAD* ☐

GLASS OPTIONS
(CHECK REQUIRED OPTION)

☐ NONE
☐ ¼" TEMPERED (NR)
☐ ¼" IREGLASS 20 (20)
☐ ¼" SUPERLITE I (20)
☐ ¼" SUPERLITE I-W Select a rating
☐ 3/16"FIRELITE NT Select a rating
☐ 5/16"FIRELITE PLUS Select a rating
☐ ⅞" KERALITE ULTRA (LOW TEMP RISE) **Optional** - Select a rating
☐ OTHER _____

SUPPLIED BY OTHERS? ☐Y ☐N

INSTALLED BY CS? ☐Y ☐N

OPTIONAL PROTECTION PLATES

STAINLESS STL. ☐

SIZE (HEIGHT) _____

PUSH SIDE _____ PULL SIDE _____

DOOR FRAME PROTECTION? Y/N ☐Y ☐N

PAGE OF

PROJECT

CUSTOMER	QUOTE #	DATE

Construction Specialties

FRAME OPENING SIZE *(WIDTH X HEIGHT)*	**PREFIT DOOR SIZE** *(WIDTH X HEIGHT)*	BLOCKING	**DOOR FACE** *ACROVYN COLOR #*	**DOOR EDGE** *ACROVYN COLOR #*

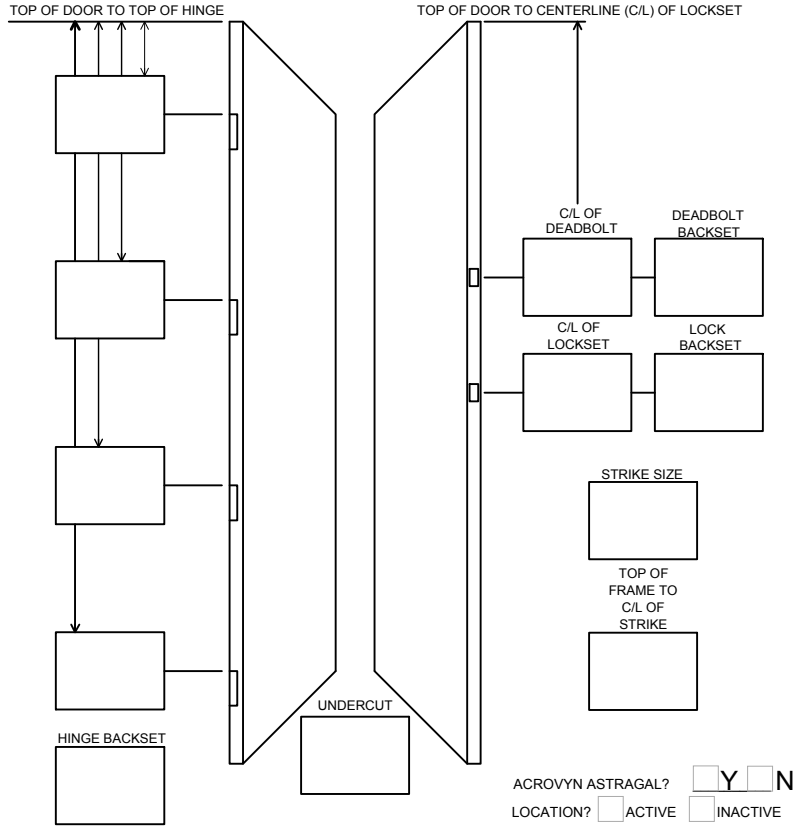

DOOR NO.	SWING
TOTAL DOORS THIS PAGE:	

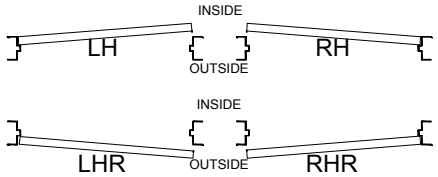

HINGE
*(*REQUIRED FOR FABRICATION)*

MANUFACTURER* _____

MFG. MODEL NO.* _____

SIZE (HEIGHT x **THICKNESS**)* _____

TEMPLATE NO.* _____

EDGE TYPE:

HINGE:
☐ BEVELED
☐ SQUARE
☐ RADIUS

LATCH:
☐ BEVELED
☐ SQUARE
☐ RADIUS

LOCKSET
*(*REQUIRED FOR FABRICATION)*

MANUFACTURER* _____

MFG. MODEL NO.* _____

CYLINDRICAL* _____ MORTISE* _____

TEMPLATE NO.* _____

FLUSHBOLT (MFG., MODEL, & TEMPLATE NO.) BOTTOM?

CONCEALED CLOSER / STOP (DEGREE OF OPENING, MFG., MODEL & TEMPLATE NO.)

EXIT DEVICE (MFG., MODEL & TEMPLATE NO.)

DEAD BOLT (MFG., MODEL & TEMPLATE NO.)

DOOR BOTTOM (MFG., MODEL & TEMPLATE NO.)

MISC. HARDWARE (TYPE, MFG., MODEL, & TEMPLATE NO.)

Construction Specialties, Inc. Tel: 908-236-0800 Fax: 908-849-4066