Model PL-5800 - 1" (25.4 mm) Hole Pattern 7.5" (190.5 mm) Perforated Vertical Storm Resistant Louver

PATENT PENDING

Material:

Material:	Louver 6063-T6 Alloy Perforated Sheet 3003 H14 aluminum
Nominal Thickness:	Heads, Jambs & Mullions: 0.10" (2.54 mm) Sill 0.08" (2.03 mm)
Nominal Blade Thickness:	0.06" (1.52 mm)
Additional Options (at additional cost):	Rear bird or Insect screen Continuous clip angles for attachment Sheet blank off, Insulated blank off Sill pans, Flange frames Integrated glazing frames

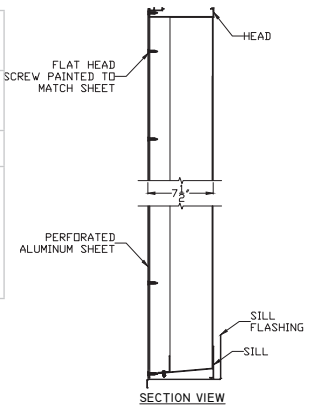

SECTION VIEW

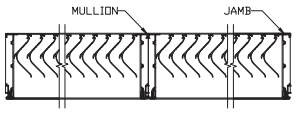

PLAN VIEW

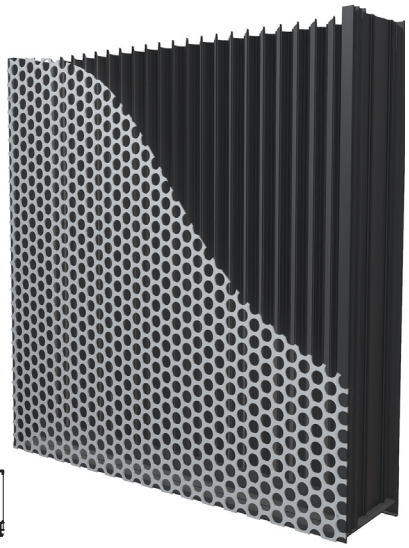

Discharge Coefficient
Intake Cd = 0.47 (Class 1)

Test Summary:
For a 4 Foot by 4 Foot Unit.
Tested with mill finish and no rear bird or insect screen

- Free area = 8.56 ft² (0.79 m²)
- Percent free area = 53.5%
- Intake pressure drop at 1000 FPM free area velocity = 0.12 in. H_2O (30.3 Pa)
- To maintain a CLASS A (99%) effectiveness rating* with:
  - a 29.1 mph wind speed an rainfall rate of 3 in/hr
    - Max. intake core velocity 5.0 m/s (981 FPM)
    - Max. intake free area velocity 8.5 m/s (1,668 FPM)
  - a 50 mph wind speed and rainfall rate of 8 in/hr
    - Max. intake core velocity 5.0 m/s (990 FPM)
    - Max. intake free area velocity 8.6 m/s (1,683 FPM)

Application and Design

PL-5800 (1" holes) was tested utilizing a test protocol derived from AMCA 550 with the exception that the louver was tested with a perforated plate across the airflow, which is not allowed in the standard. Less than 1% of the total water penetrated through the louver and perforated plate throughout the duration of the test.

Wind Driven Rain Performance: *Tested with 1m² core area, mill finish and no rear bird or insect screen**

The louver test was based on a 39.370" (1.0 m) x 39.370" (1.0 m) core area unit tested at a rainfall rate of 3" per hour (75 mm/hr) and with a wind directed to the face of the louver at a velocity of 29.1 mph (13 m/s) as well as a rainfall rate of 8" per hour (203 mm) and a wind velocity of 50 mph (23.3 m/s). The test data shall show the water penetration effectiveness rating at each corresponding ventilation rate.

29.1 mph (13 m/s) & 3" (75 mm) rain per hour

Core Velocity Through Cal. Plate (m/s):	0.0	0.5	1.0	1.5	2.0	2.5	3.0	3.5	4.0	4.5	5.0
Core Velocity Through Louver (ft/min):	0	98	196	294	392	490	588	687	785	883	981
Free Area Velocity (ft/min):	0	167	333	500	666	833	999	1168	1335	1501	1668
Rating Effectiveness:	A	A	A	A	A	A	A	A	A	A	A
Effectiveness Ratio (%):									99.8	99.7	99.6

50 mph (22.3 m/s) & 8" (203 mm) rain per hour

Core Velocity Through Cal. Plate (m/s):	0.0	0.5	1.0	1.5	2.0	2.5	3.0	3.5	4.0	4.5	5.0
Core Velocity Through Louver (ft/min):	0	99	199	298	396	495	594	693	792	891	990
Free Area Velocity (ft/min):	0	169	338	507	673	842	1010	1178	1347	1515	1683
Rating Effectiveness:	A	A	A	A	A	A	A	A	A	A	A
Effectiveness Ratio (%):											100.0

Effectiveness Rating:	A = 1 to 0.99	B = 0.989 to 0.95	C = 0.949 to 0.80	D = Below 0.80

©2025 Construction Specialties, Inc.

Model PL-5800 - 1" (25.4 mm) Hole Pattern 7.5" (190.5 mm) Perforated Vertical Storm Resistant Louver

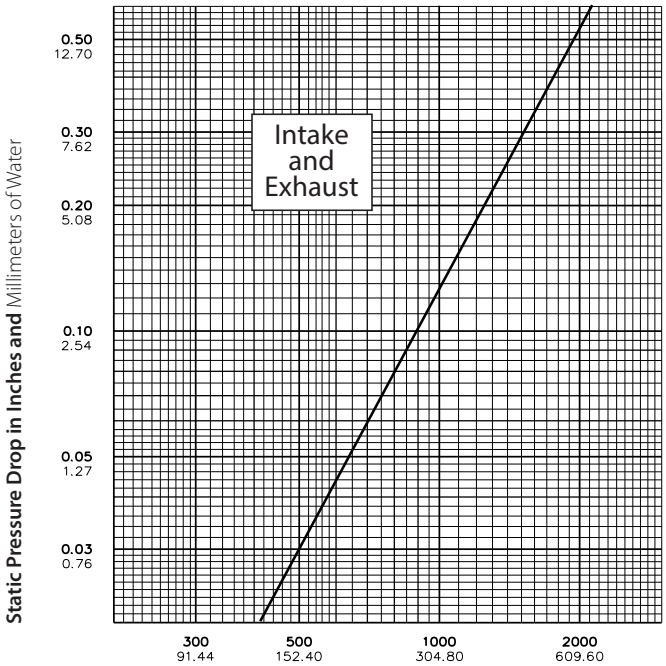

Air Velocity in Feet and Meters per Minute **Through Free Area**

Data corrected to standard air density.
48" x 48" (121.92cm x 121.92cm).

Free Area Table (Free area in **sq. feet** and sq. meters)
For additional sizes, please visit:
https://www.c-sgroup.com/architectural-louvers/louvers-airflow-tool

Width in Inches and Meters

Height in Inches and Meters

	18 0.46	24 0.61	30 0.76	36 0.91	42 1.07	48 1.22	54 1.37	60 1.52
18 0.46	**0.96** 0.09	**1.34** 0.12	**1.72** 0.16	**2.10** 0.19	**2.47** 0.23	**2.85** 0.26	**3.15** 0.29	**3.53** 0.33
24 0.61	**1.35** 0.13	**1.87** 0.17	**2.40** 0.22	**2.93** 0.27	**3.46** 0.32	**3.99** 0.37	**4.41** 0.41	**4.94** 0.46
30 0.76	**1.73** 0.16	**2.41** 0.22	**3.09** 0.29	**3.77** 0.35	**4.45** 0.41	**5.13** 0.48	**5.67** 0.53	**6.35** 0.59
36 0.91	**2.11** 0.20	**2.95** 0.27	**3.78** 0.35	**4.61** 0.43	**5.44** 0.51	**6.27** 0.58	**6.93** 0.64	**7.76** 0.72
42 1.07	**2.50** 0.23	**3.48** 0.32	**4.47** 0.41	**5.45** 0.51	**6.43** 0.60	**7.41** 0.69	**8.19** 0.76	**9.18** 0.85
48 1.22	**2.88** 0.27	**4.02** 0.37	**5.15** 0.48	**6.29** 0.58	**7.42** 0.69	**8.56** 0.79	**9.45** 0.88	**10.59** 0.98
54 1.37	**3.27** 0.30	**4.55** 0.42	**5.84** 0.54	**7.12** 0.66	**8.41** 0.78	**9.70** 0.90	**10.71** 1.00	**12.00** 1.11
60 1.52	**3.65** 0.34	**5.09** 0.47	**6.53** 0.61	**7.96** 0.74	**9.40** 0.87	**10.84** 1.01	**11.97** 1.11	**13.41** 1.25
66 1.68	**4.04** 0.38	**5.62** 0.52	**7.21** 0.67	**8.80** 0.82	**10.39** 0.97	**11.98** 1.11	**13.23** 1.23	**14.82** 1.38
72 1.83	**4.42** 0.41	**6.16** 0.57	**7.90** 0.73	**9.64** 0.90	**11.38** 1.06	**13.12** 1.22	**14.49** 1.35	**16.23** 1.51
78 1.98	**4.81** 0.45	**6.70** 0.62	**8.59** 0.80	**10.48** 0.97	**12.37** 1.15	**14.26** 1.32	**15.76** 1.46	**17.65** 1.64
84 2.13	**5.19** 0.48	**7.23** 0.67	**9.27** 0.86	**11.32** 1.05	**13.36** 1.24	**15.40** 1.43	**17.02** 1.58	**19.06** 1.77
90 2.29	**5.57** 0.52	**7.77** 0.72	**9.96** 0.93	**12.15** 1.13	**14.35** 1.33	**16.54** 1.54	**18.28** 1.70	**20.47** 1.90
96 2.44	**5.96** 0.55	**8.30** 0.77	**10.65** 0.99	**12.99** 1.21	**15.34** 1.42	**17.68** 1.64	**19.54** 1.81	**21.88** 2.03
102 2.59	**6.34** 0.59	**8.84** 0.82	**11.33** 1.05	**13.83** 1.28	**16.33** 1.52	**18.82** 1.75	**20.80** 1.93	**23.29** 2.16
108 2.74	**6.73** 0.63	**9.37** 0.87	**12.02** 1.12	**14.67** 1.36	**17.31** 1.61	**19.96** 1.85	**22.06** 2.05	**24.70** 2.30
114 2.90	**7.11** 0.66	**9.91** 0.92	**12.71** 1.18	**15.51** 1.44	**18.30** 1.70	**21.10** 1.96	**23.32** 2.17	**26.12** 2.43
120 3.05	**7.50** 0.70	**10.45** 0.97	**13.40** 1.24	**16.34** 1.52	**19.29** 1.79	**22.24** 2.07	**24.58** 2.28	**27.53** 2.56

Upper Numerals English Units/Lower Numerals Metric Units

©2025 Construction Specialties, Inc. | PL-5800.1.0.April2025.V03