7/8" STAINLESS STEEL GRIDLINE 2 (STRAIGHT RAILS) WITH RECYCLED RUBBER INSERTS AND RECESSED LEVEL BASE FRAME / WITH ALUMINUM DRAIN PAN			
INSERT STYLE: RECYCLED RUBBER	INSERT COLOR: PLEASE ADVISE	CATALOG NUMBER: G6	PART NUMBER:

NO.	REVISION	DATE	BY

NO.	F&F RELEASE	DATE	BY

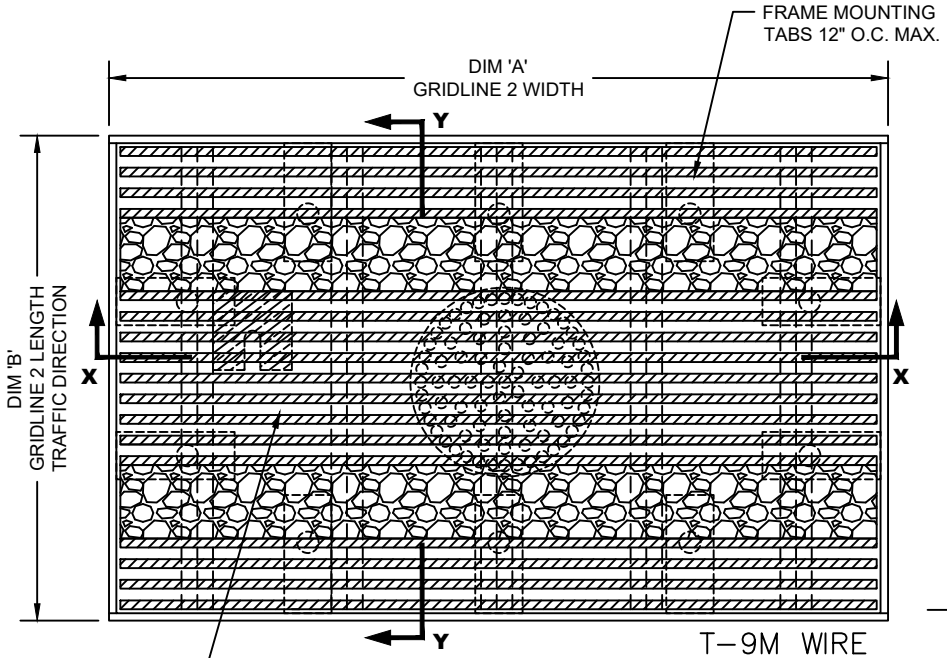

TYPICAL PLAN VIEW

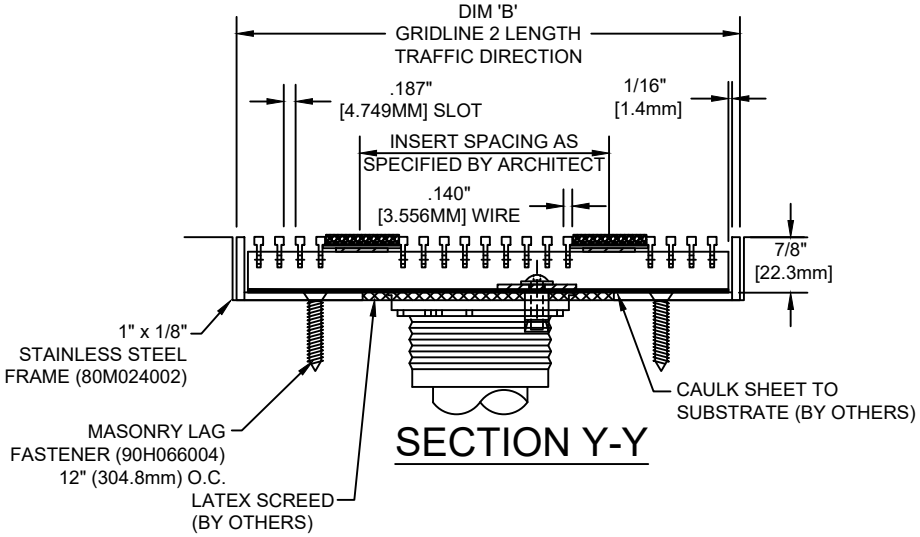

SECTION Y-Y

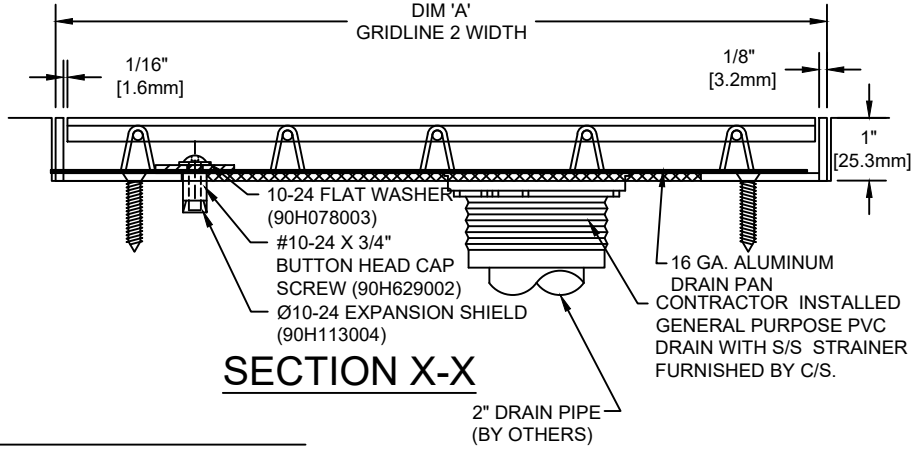

SECTION X-X

NOTES:

* MECHANICALLY INTELOCKED DESIGN TO ENSURE CORRECT WEIGHT BEARING PROPERTIES.
*MAX. SINGLE GRID SIZE NOT TO EXCEED 10'-0" [3.048M] IN WIDTH (DIM 'A') OR 6'-0" [1.829M] IN LENGTH (DIM 'B')
*GRIDS SHALL BE ABLE TO SUPPORT A 500LB ROLLING LOAD.
* SURFACE WIRE SPACING PROVIDES A 57.7% EFFECTIVE OPEN AREA FOR DIRT AND MOISTURE REMOVAL.

Construction Specialties™
6696 Route 405 Highway, Muncy PA 17756
(800) 233-8493 • Fax (570) 546-4692 • www.c-sgroup.com

PLEASE VERIFY ALL

QTY	MARK #	LOCATION	MODEL	DIM 'A' WIDTH	DIM 'B' LENGTH	FRAME FINISH	REMARKS

PROJECT:		
LOCATION:		
CONTRACTOR:		
AGENT:		SHT:
DRG. BY:	DATE:	JOB NO.: