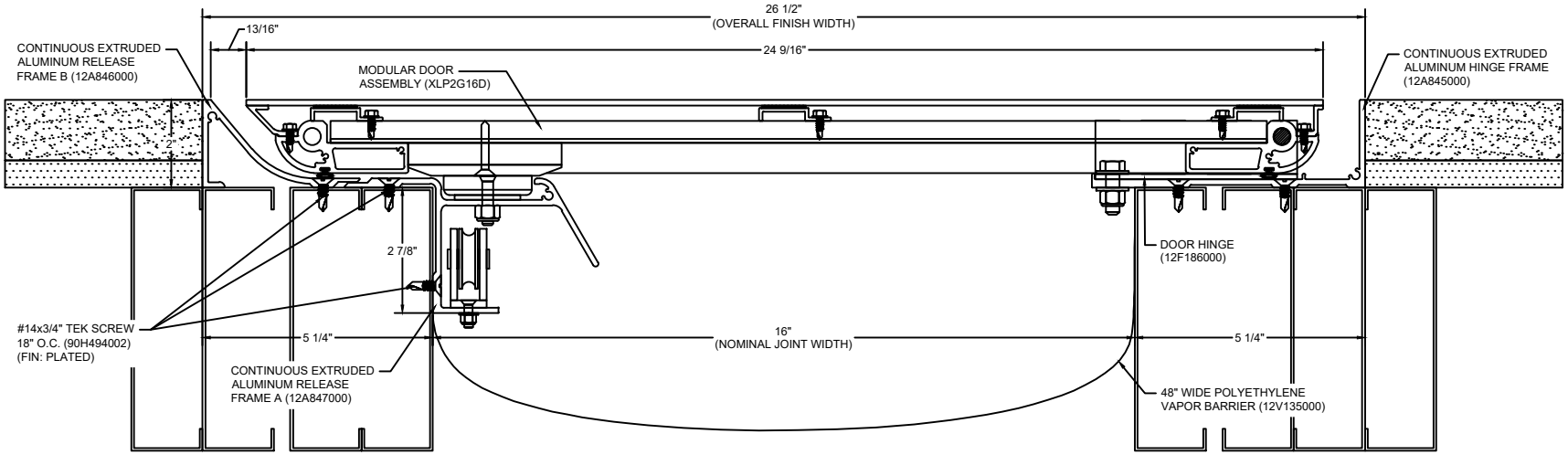

Model: **XLP2G-1600**

Construction Specialties®
www.c-sgroup.com
6696 Route 405 Highway, Muncy, PA 17756
Phone: (800) 233-8493 / Fax: (570) 546-8022

895 Lakefront Promenade, Mississauga, Ontario L5E 2C2 Canada
Phone: (888) 895-8955 / Fax: (905) 274-6241

© Copyright 2018 Construction Specialties, Inc.

PROJECT:	**SCALE:** NTS
CUSTOMER:	**DATE:**
LOCATION:	**JOB NO.:**
DRAWN BY:	**SHEET NO.:**

11/26/2019 9:11 AM