SINGLE DRAINABLE MULLION LOUVER MODEL A6097

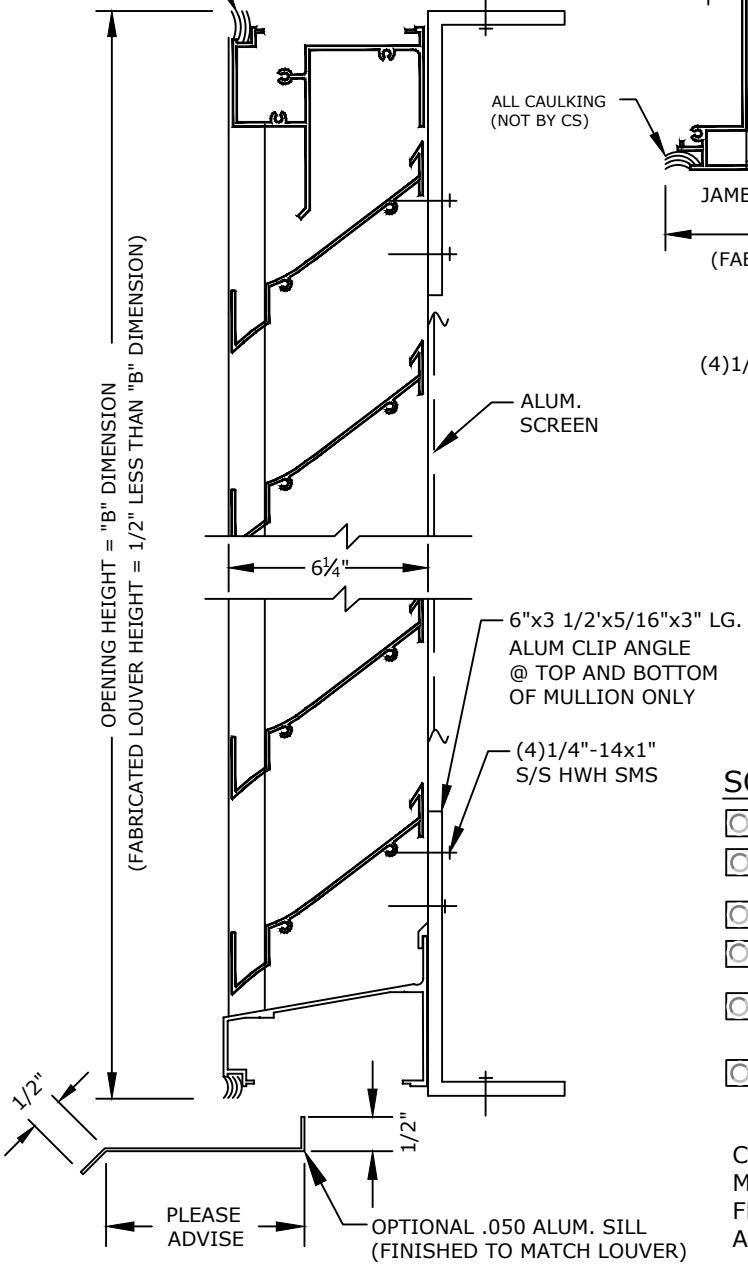

VERTICAL SECTION (NTS)

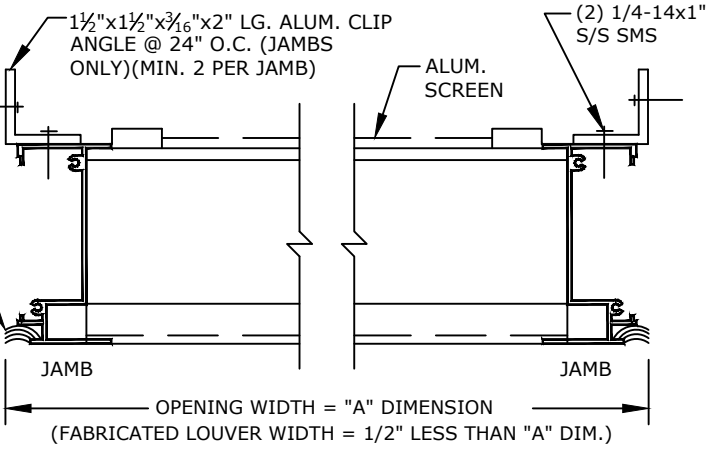

PLAN VIEW (NTS)

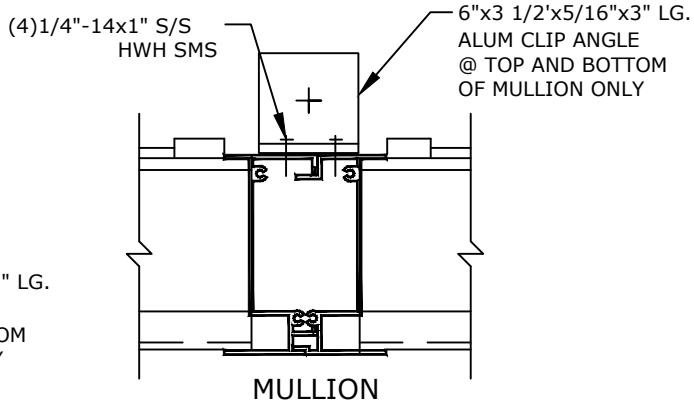

MULLION

SCREENS

- ○ SCREEN NOT REQUIRED
- ○ SCREEN REQUIRED
- ○ INTERIOR MOUNTED
- ○ EXTERIOR MOUNTED
- ○ BIRDSCREEN: 1/2" MESH .063 DIA. ALUM. WIRE (MILL FINISH)
- ○ INSECT SCREEN: 18x16 ALUM. MESH (MILL FINISH)

FINISHES

- ○ STANDARD MILL
- ○ FLUOROPOLYMER POWDER COAT (NOT AVAILABLE IN 600XL OR 700)
- ○ KYNAR (500),(600XL)or(700)
  - ○ (1) OF CS STD. COLORS
  - ○ CUSTOM COLOR, CS REQUIRES A COLOR CHIP FOR MATCHING
- ○ BRONZE ANODIC (DARK OR MED.)
- ○ CLEAR ANODIZE
- ○ OTHER _____

CS EXTRUDED ALUMINUM SINGLE DRAINABLE LOUVER MODEL A6097. FRAMES AND BLADES TO BE FABRICATED FROM 6063-T6 ALLOY, WITH REINFORCING BOSSES. ALL FASTENERS TO BE STAINLESS STEEL.

UNSUPPORTED BLADE LENGTH = @ PSF.

MARK	QTY.	"A" DIM.	"B" DIM.	NUMBER OF MULLIONS	LOUVER LOCATION	REMARKS
						CKD. BY:

Construction Specialties, Inc.
3 Werner Way
Lebanon, New Jersey 08833
(800) 233-8493

PROJECT:	DRAWN BY:
CUSTOMER:	DATE:
ARCH'T:	DWG. NO:
AGENT:	SHEET OF