STORM RESISTANT LOUVER MODEL RS-5605

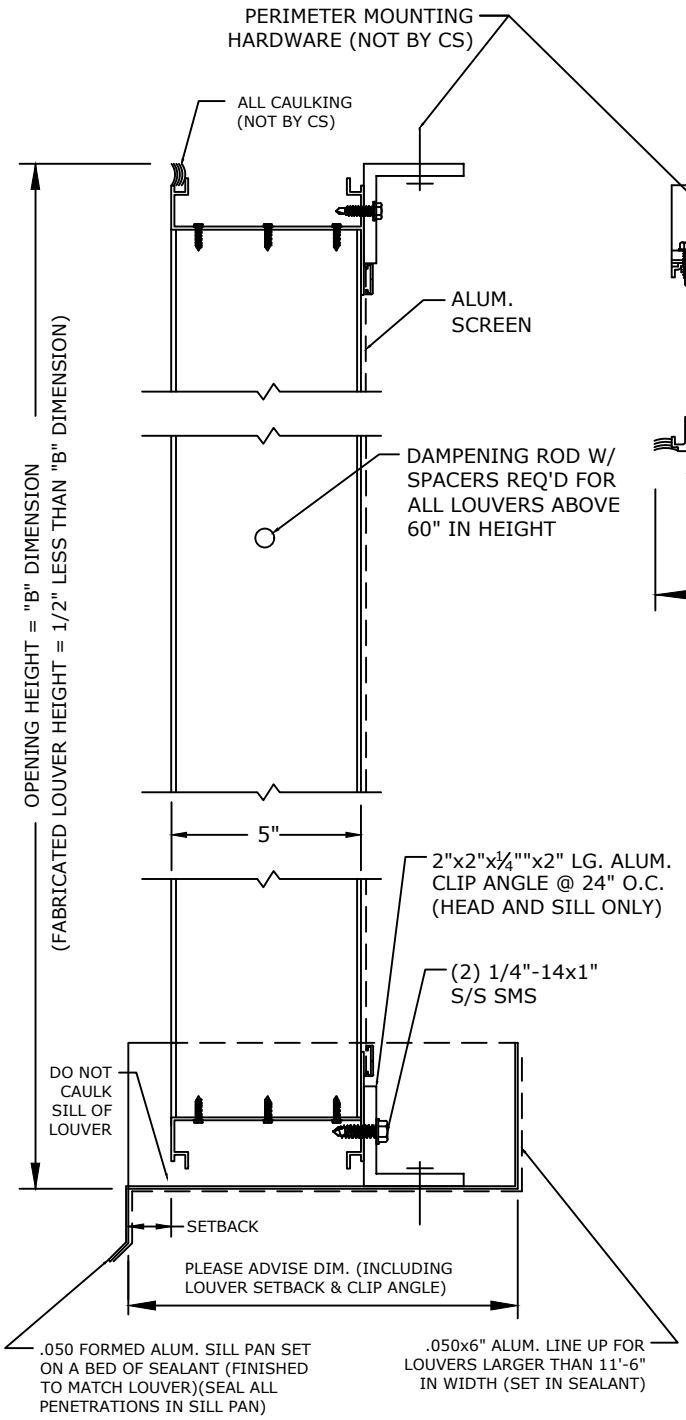

VERTICAL SECTION (NTS)

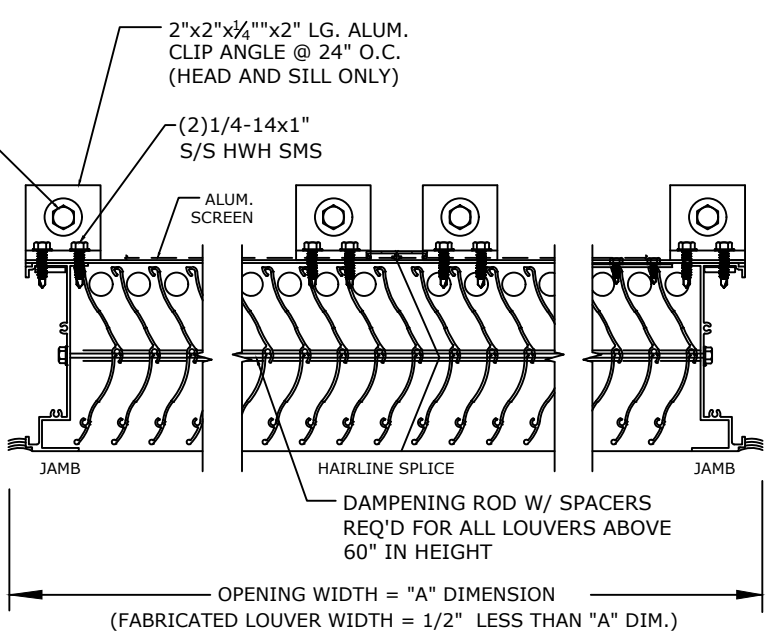

PLAN VIEW

NTS

SCREENS

- ◯ SCREEN NOT REQUIRED
- ◯ SCREEN REQUIRED
- ◯ INTERIOR MOUNTED
- ◯ EXTERIOR MOUNTED
- ◯ BIRDSCREEN: 1/2" MESH .063 DIA. ALUM. WIRE (MILL FINISH)
- ◯ INSECT SCREEN: 18x16 ALUM. MESH (MILL FINISH)

FINISHES

- ◯ STANDARD MILL
- ◯ FLUOROPOLYMER POWDER COAT (NOT AVAILABLE IN 600XL OR 700)
- ◯ KYNAR (500),(600XL)or(700)
  - ◯ (1) OF CS STD. COLORS
  - ◯ CUSTOM COLOR, CS REQUIRES A COLOR CHIP FOR MATCHING
- ◯ BRONZE ANODIC (DARK OR MED.)
- ◯ CLEAR ANODIZE
- ◯ OTHER _____

CS EXTRUDED ALUMUMIN STORM RESISTANT LOUVER MODEL RS-5605. FRAMES AND BLADES TO BE FABRICATED FROM 6063-T6 ALLOY, WITH REINFORCING BOSSES. ALL FASTENERS TO BE STAINLESS STEEL.

UNSUPPORTED BLADE LENGTH = @ PSF.

MARK	QTY.	"A" DIM.	"B" DIM.	NUMBER OF MULLIONS	LOUVER LOCATION	REMARKS
						CKD. BY:

Construction Specialties, Inc.
3 Werner Way
Lebanon, New Jersey 08833
800-233-8493

PROJECT:	DRAWN BY:
CUSTOMER:	DATE:
ARCH'T:	DWG. NO:
AGENT:	SHEET 1OF