PEDIGRID WITH RECESSED DEEP PIT FRAME OPTION #2

INSERT STYLE:	INSERT COLOR: PLEASE ADVISE	CATALOG NUMBER: G1	PART NUMBER:

NO.	REVISION	DATE	BY

NO.	F&F RELEASE	DATE	BY

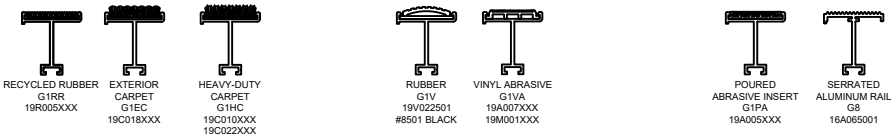

PEDIGRID INSERT STYLES

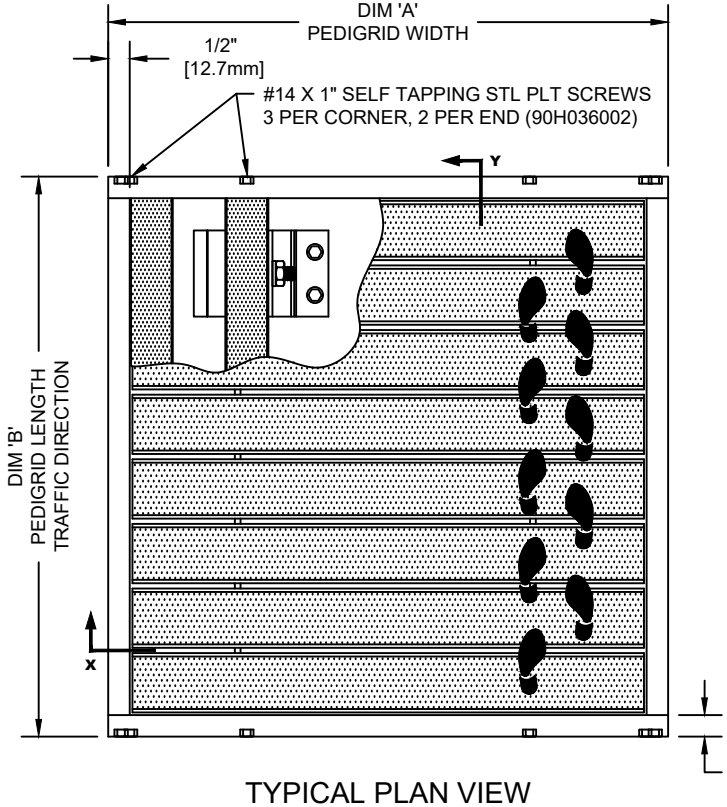

TYPICAL PLAN VIEW

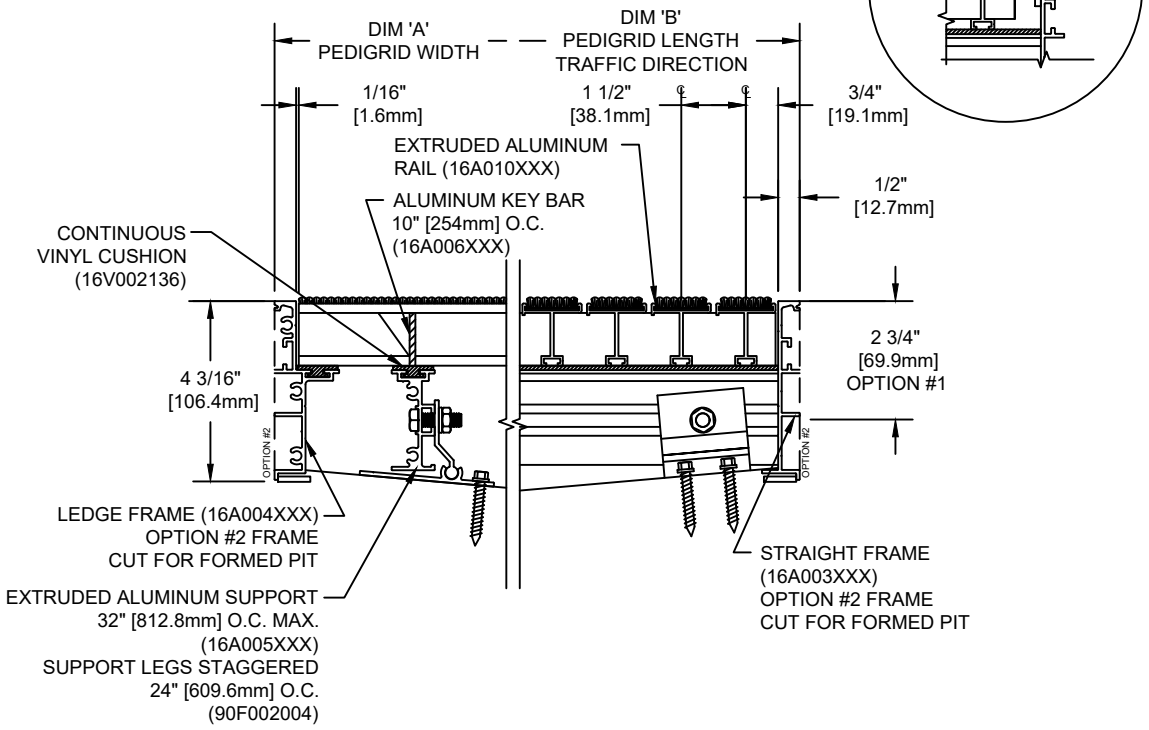

SECTION X-Y

NOTES:

*GRIDS OVER STRUCTURES @ 32" O.C. TO SUPPORT A MAX LOAD OF 300 LBS PER SQ. FT. ALL GRIDS WITH LEVEL BASE FRAME TO SUPPORT A 400 LB. ROLLING LOAD. LARGER LOADING MAY BE ACCOMMODATED. CONTACT C/S SALES WITH SPECIFIC LOADING REQUIREMENTS.

*PLEASE VERIFY TRAFFIC DIRECTION.

*MAXIMUM MODULE SIZE OF GRID NOT TO EXCEED 12'-0" [3.6M] IN WIDTH (DIM "A") & 3'-0" [.91M] IN LENGTH T.D. (DIM "B").

*ALL SURFACES IN CONTACT WITH MASONRY ARE TO RECEIVE A COAT OF ZINC CHROMATE PRIMER.

*MITERED FRAME CORNERS ARE NOT AVAILABLE.

*WITH OPTION #2, THE ANCHOR LEG IS CUT OFF TO ALLOW FOR FLUSH MOUNTING IN A FORMED PIT.

*DUE TO 1 1/2" MODULE OF PEDIGRID, INSIDE OF FRAME DIMENSION SHOULD BE CHANGED ONLY IN INCREMENTS OF 1 1/2" [38.1mm] TO AVOID THE USE OF FILLER BARS.

*ADDITIONAL SPECIFICATIONS ARE CONTAINED IN THE LATEST C/S CATALOG OR AT C-SGROUP.COM AND ARE CONSIDERED PART OF THIS TRANSMITTAL.

Construction Specialties™
6696 Route 405 Highway, Muncy PA 17756
(800) 233-8493 • Fax (570) 546-4692 • www.c-sgroup.com

PLEASE VERIFY ALL

QTY	MARK #	LOCATION	MODEL	DIM 'A' WIDTH	DIM 'B' LENGTH	FINISH	REMARKS

PROJECT:		
LOCATION:		
CONTRACTOR:		
AGENT:		SHT:
DRG. BY:	DATE:	JOB NO.: