ACOUSTICAL MULLION LOUVER MODEL A6370

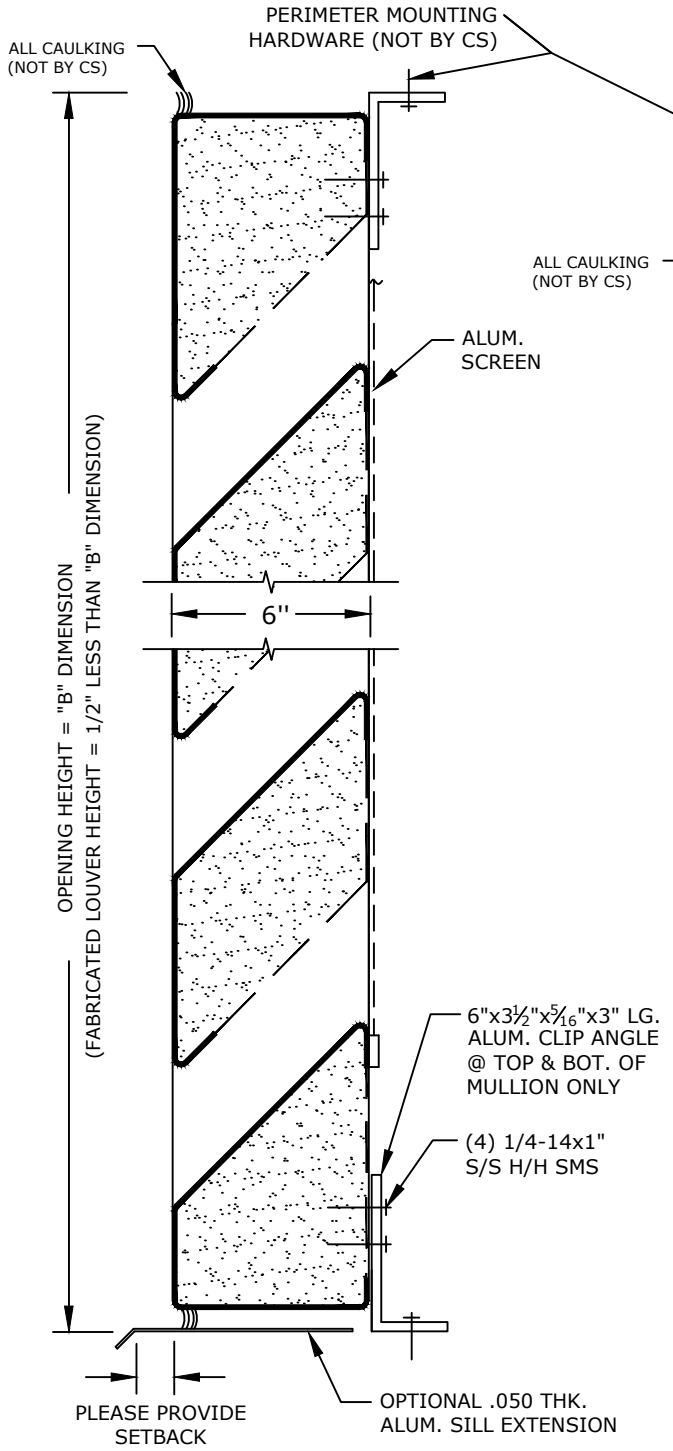

VERTICAL SECTION
NTS

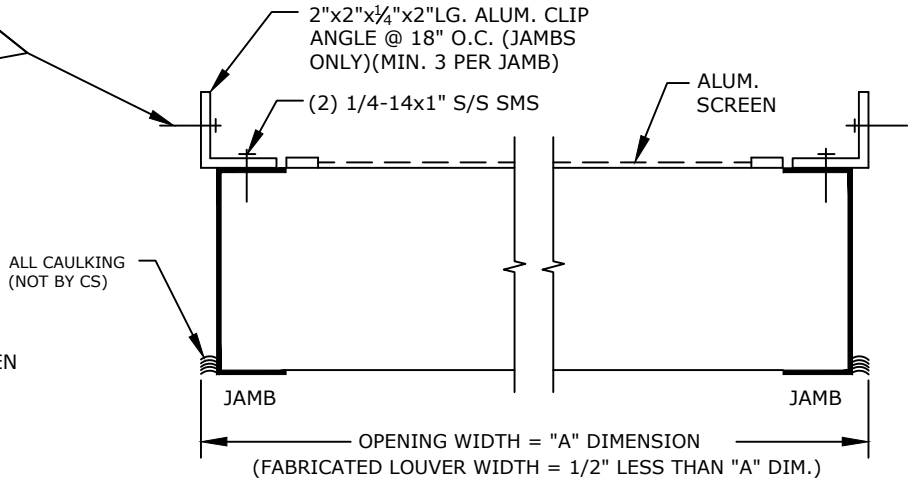

PLAN VIEW
NTS

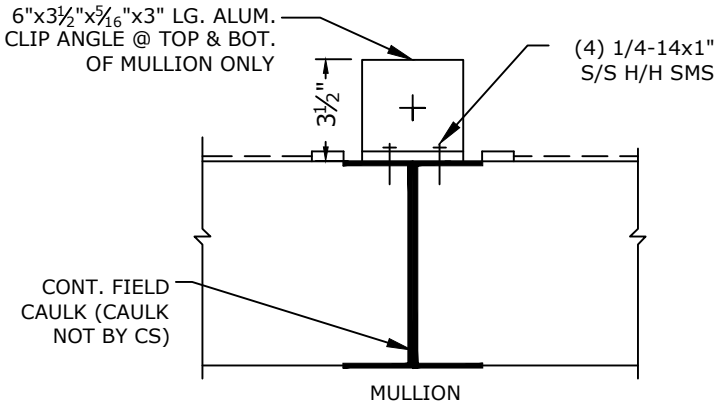

SCREENS

- ☐ SCREEN NOT REQUIRED
- ☐ SCREEN REQUIRED
- ☐ INTERIOR MOUNTED
- ☐ EXTERIOR MOUNTED
- ☐ BIRDSCREEN: 1/2" MESH .063 DIA. ALUM. WIRE (MILL FINISH)
- ☐ INSECT SCREEN: 18x16 ALUM. MESH (MILL FINISH)

FINISHES

- ☐ STANDARD MILL
- ☐ FLUOROPOLYMER POWDER COAT (NOT AVAILABLE IN 600XL OR 700)
- ☐ KYNAR (500),(600XL)or(700)
  - ☐ (1) OF CS STD. COLORS
  - ☐ CUSTOM COLOR, CS REQUIRES A COLOR CHIP FOR MATCHING
- ☐ BRONZE ANODIC (DARK OR MED.)
- ☐ CLEAR ANODIZE
- ☐ OTHER _____

CS FORMED ALUMINUM FIXED ACOUSTICAL LOUVER MODEL A6370. FRAMES AND BLADES TO BE FABRICATED FROM ALUMINUM SHEET. ALL FASTENERS TO BE STAINLESS STEEL.

UNSUPPORTED BLADE LENGTH = @ PSF.

MARK	QTY.	"A" DIM.	"B" DIM.	NUMBER OF MULLIONS	LOUVER LOCATION	REMARKS
						CKD. BY:

Construction Specialties, Inc.
3 Werner Way
Lebanon, New Jersey 08833
(800) 233-8493

PROJECT:	DRAWN BY:
CUSTOMER:	DATE:
ARCH'T:	DWG. NO:
AGENT:	SHEET OF