Drawing No.

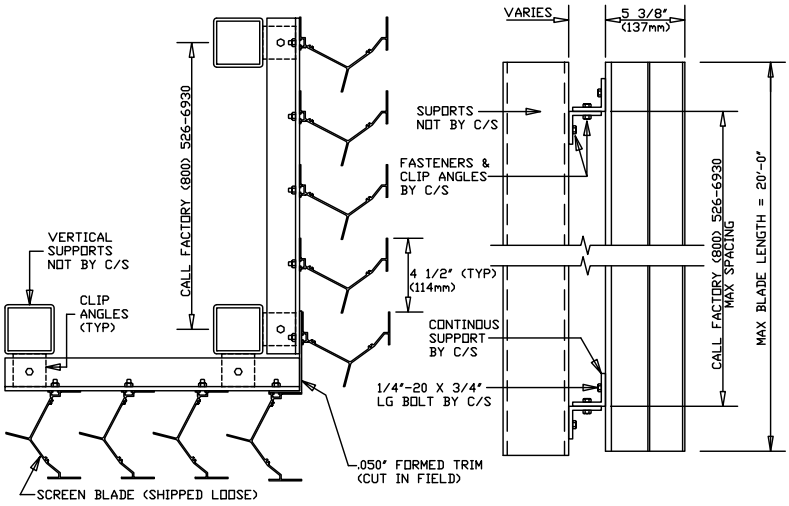

VERT-A-CADE 1000

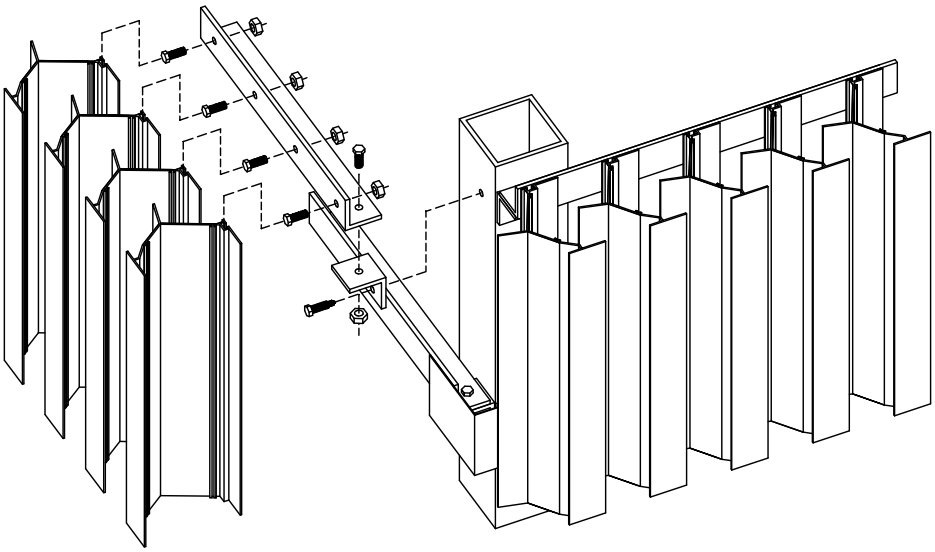

Revisions				Drawn By	Job:	
No.		Date	By			
				Checked By	Cont'r.:	
				Date Approv	Arch't.:	
				Scale	Agent:	Sheet Of
				Date	CONSTRUCTION SPECIALTIES, INC. 49 MEEKER AVENUE, CRANFORD, NEW JERSEY	Drawing No.

THIS DOCUMENT IS THE PROPERTY OF CONSTRUCTION SPECIALTIES, INC. AND CONTAINS CONFIDENTIAL PROPRIETARY INFORMATION THAT IS NOT TO BE DICLOSED TO THIRD PARTIES AND IS NOT TO BE USED WITHOUT APPROVAL IN WRITING FROM CONSTRUCTION SPECIALTIES, INC.