SPLIT BLADE DRAINABLE MULLION LOUVER MODEL 6917

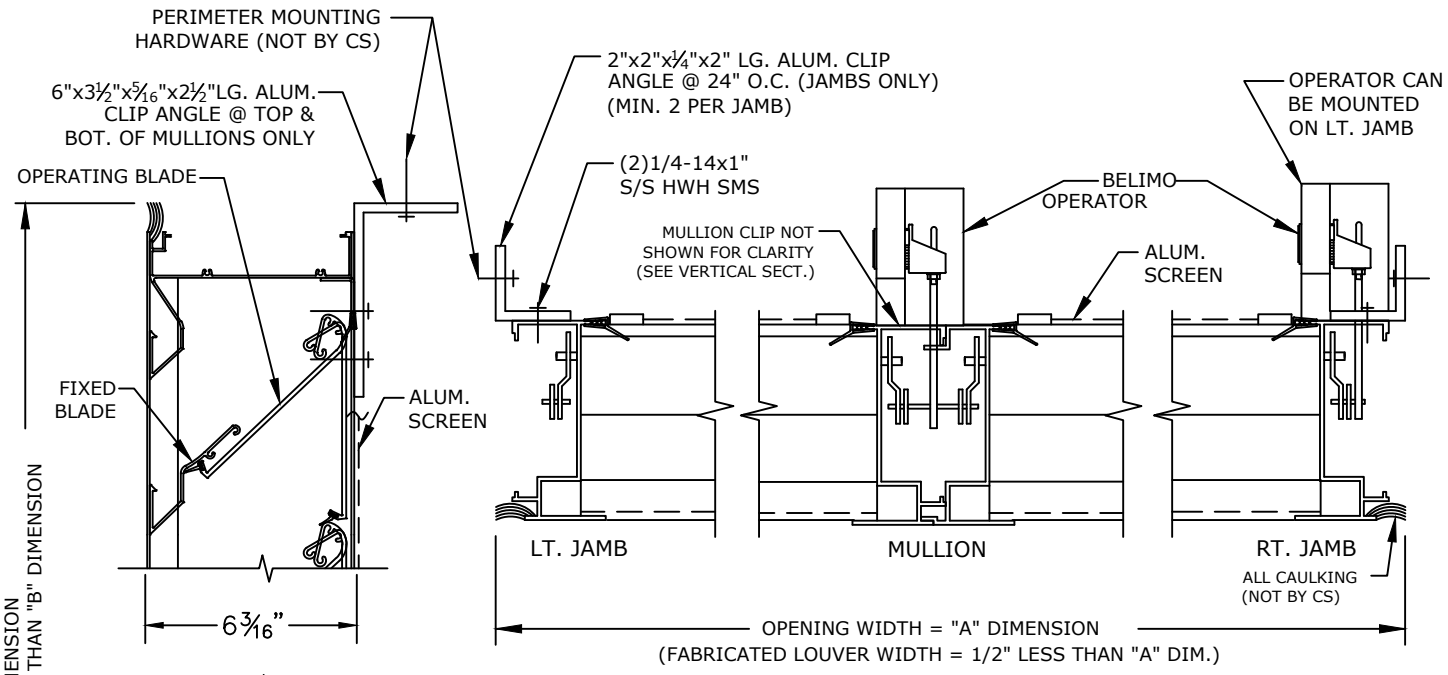

PLAN VIEW
NTS

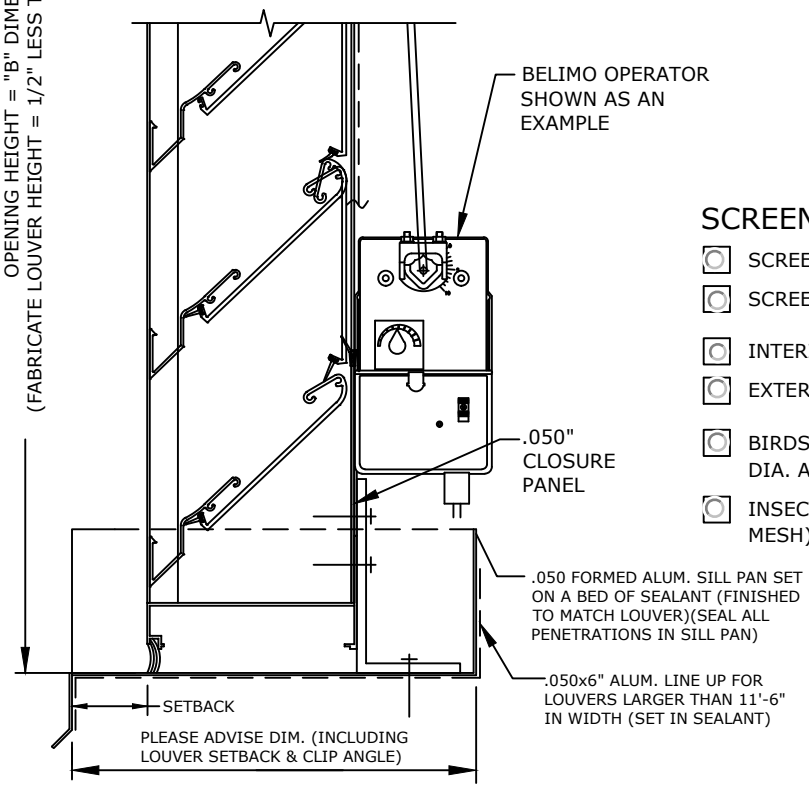

VERTICAL SECTION (NTS)

SCREENS

- ☐ SCREEN NOT REQUIRED
- ☐ SCREEN REQUIRED
- ☐ INTERIOR MOUNTED
- ☐ EXTERIOR MOUNTED
- ☐ BIRDSCREEN: 1/2" MESH .063 DIA. ALUM. WIRE (MILL FINISH)
- ☐ INSECT SCREEN (18x16 ALUM. MESH) (MILL FINISH)

FINISHES

- ☐ STANDARD MILL
- ☐ FLUOROPOLYMER POWDER COAT (NOT AVAILABLE IN 600XL OR 700)
- ☐ KYNAR (500),(600XL)or(700)
  - ☐ (1) OF CS STD. COLORS
  - ☐ CUSTOM COLOR, CS REQUIRES A COLOR CHIP FOR MATCHING
- ☐ BRONZE ANODIC (DARK OR MED.)
- ☐ CLEAR ANODIZE
- ☐ OTHER _____

CS EXTRUDED ALUM. SPLIT BLADE FIXED/OPERATING DRAINABLE BLADE LOUVER MODEL 6917. FRAMES AND BLADES TO BE FABRICATED FROM 6063-T6 ALLOY, WITH REINFORCING BOSSES. ALL OPERATING BLADES TO BE PIVOTED ON ZAMAC ALLOY PINIONS OPERATING IN SELF-LUBRICATING NYLON BEARINGS. ALL FASTENERS TO BE STAINLESS STEEL.

UNSUPPORTED BLADE LENGTH= @ PSF.

MARK	QTY.	"A" DIM.	"B" DIM.	NUMBER OF MULLIONS	LOCATION	REMARKS
						CKD. BY:

Construction Specialties, Inc.
3 Werner Way
Lebanon, New Jersey 08833
(800) 233-8493

PROJECT:	DRAWN BY:
CUSTOMER:	DATE:
ARCH'T:	DWG. NO:
AGENT:	SHEET OF