MODEL XLS INSTALLATION INSTRUCTIONS

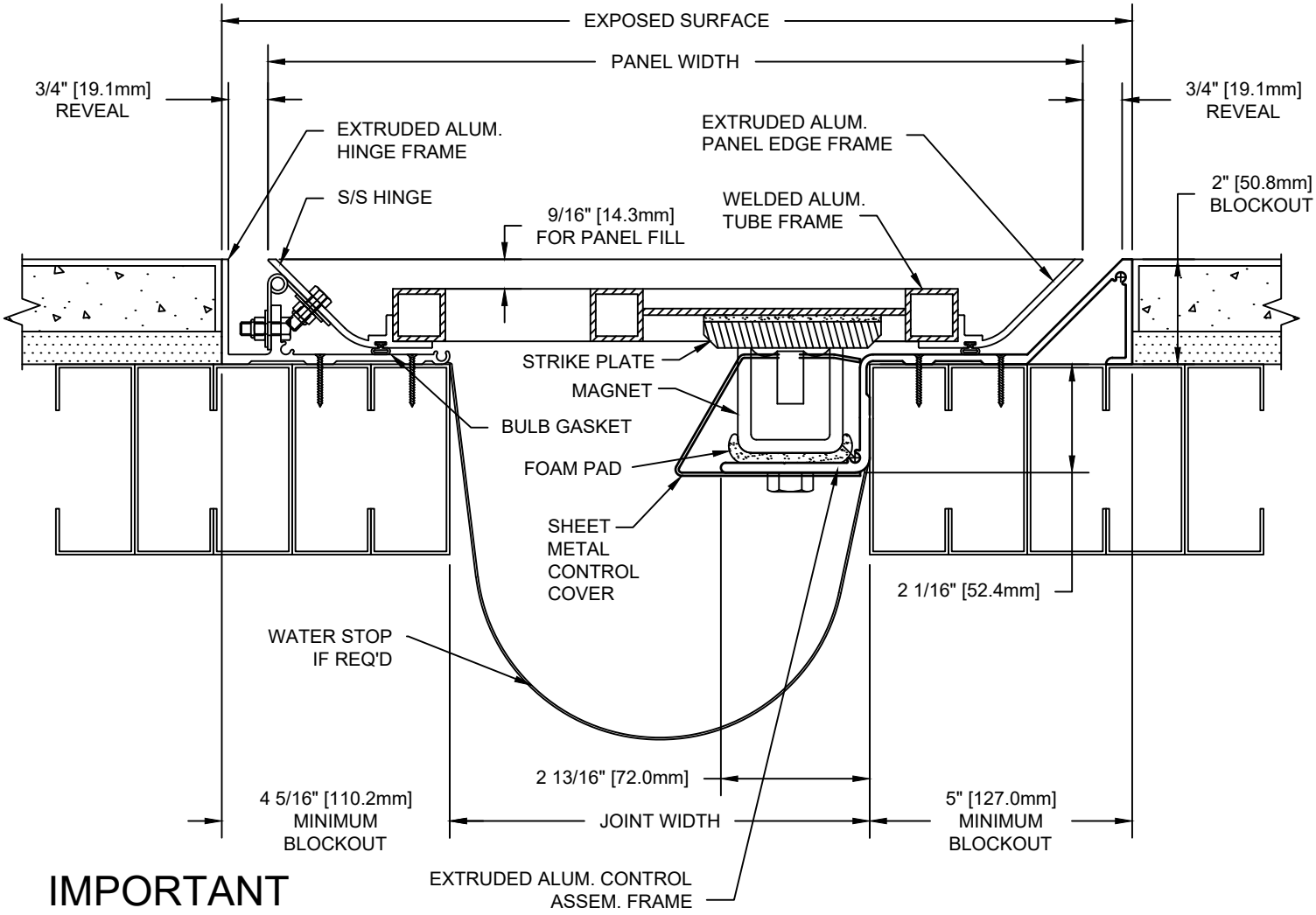

IMPORTANT INFORMATION

Prior to the commencement of Installation all material MUST be inspected for Damage. Any damage must be reported to Construction Specialties as soon as possible, so that replacement materials may be furnished without delay.

All work must be completed as per Architects Approved "Shop Drawings", and in accordance with these Installation Instructions. When installation is complete, all materials must be protected from damage until the Architects FINAL INSPECTION.

All materials should be arranged in the order that they are to be installed. All hardware required for each portion of the work should be placed with the appropriate materials.

Please review all Approved Shop Drawings and this Document to familiarize yourself with all the details and components of this assembly.

IMPORTANT:
READ THROUGH ALL INSTRUCTIONS PRIOR TO STARTING INSTALLATION

11/3/26

Construction Specialties™
6696 Route 405 Highway, Muncy PA 17756
(800) 233-8493. Fax (570) 546-5169.
www.c-sgroup.com

This document is the property of Construction Specialties, Inc. and contains CONFIDENTIAL PROPRIETARY INFORMATION that is not to be disclosed to third parties and is not to be used without approval in writing from Construction Specialties, Inc.

GENERAL NOTES

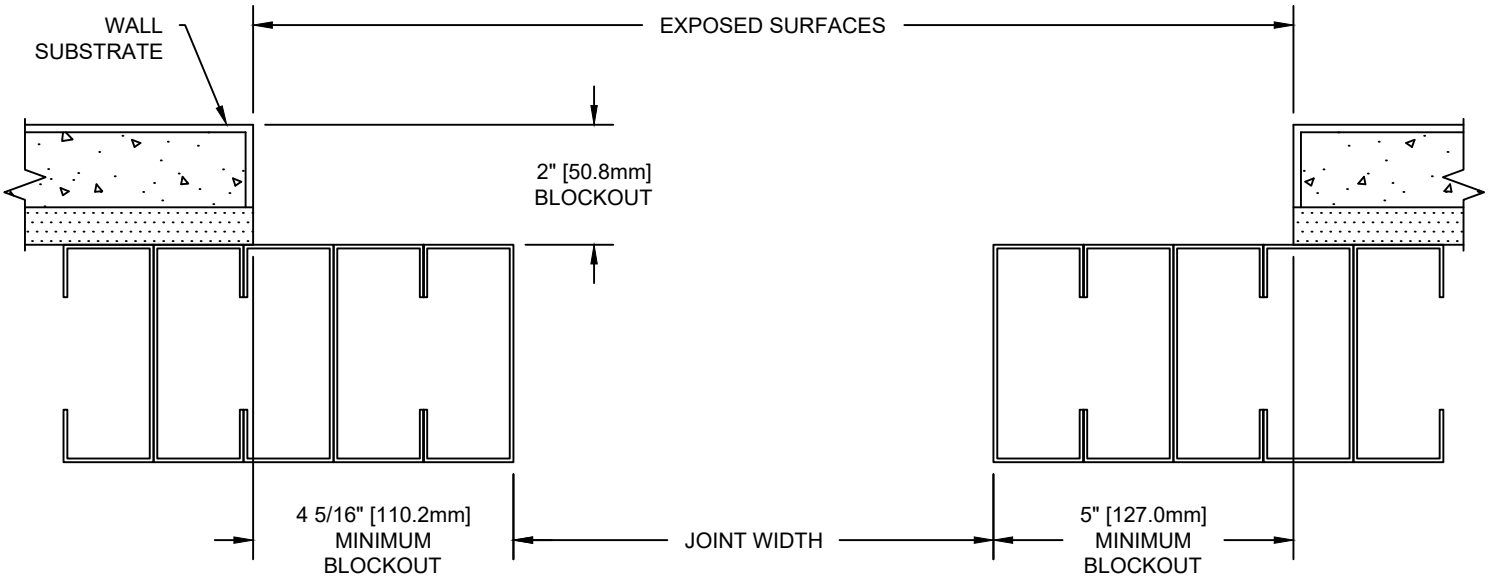

1.) Before beginning installation of the "XLS" joint covers, review the layouts for the various runs of joint cover as detailed on the approved Construction Specialties shop drawings.

2.) The "XLS" series Joint Covers must be securely mounted to a structurally sound wall. Repair all damage to the blockouts before beginning installation.

3.) The blockouts in which the covers are to be mounted must be **flat, level and parallel**. **The base of the blockout must be flat (along the length of the joint) to within +/-1/16" [1.6mm] and level (across the joint) to within +/-1/16" [1.6mm].**

4.) The blockout width shown on the Construction Specialties shop drawings is a minimum width dimension. The blockout may be made wider to allow for greater installation tolerance.

5.) The surface of the blockouts must be clean and free from any loose dust, dirt, debris and oils that would affect the installation of the covers.

6.) It is possible that the expansion/seismic joint may have experienced some amount of movement at the time of installation. For proper installation of the "XLS" covers, the joint width **must be within +/-1/4" [6.4mm] of nominal**. If the joint width at the time of installation is not within this tolerance, please contact the factory as some adjustments to the key installation dimensions may be required. These instructions assume that the nominal joint is within tolerance.

7.) Coordinate installation of cover with installation of fire barrier systems and waterstop membrane when required.

STEP 1

CONTROL FRAME INSTALLATION

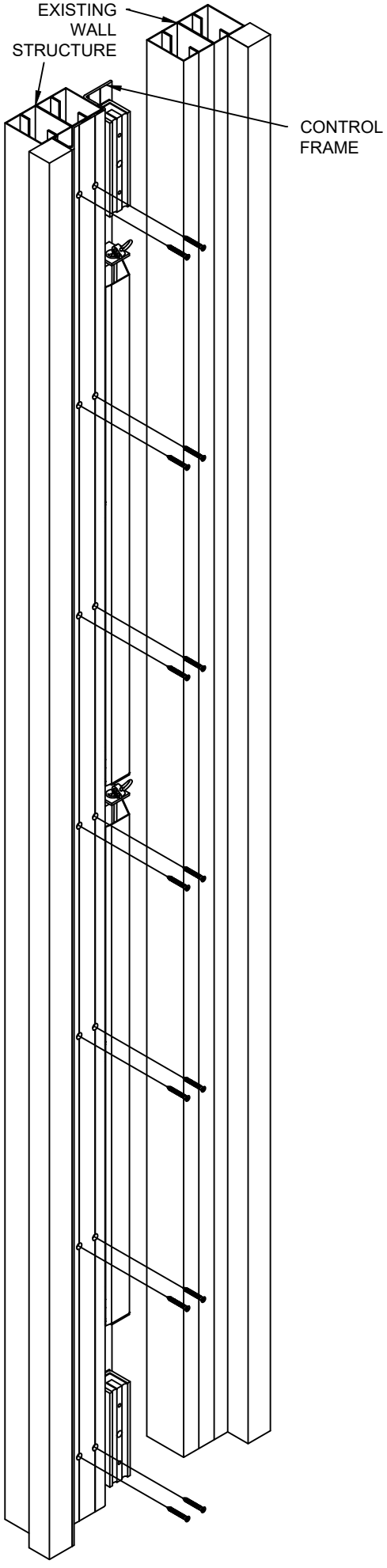

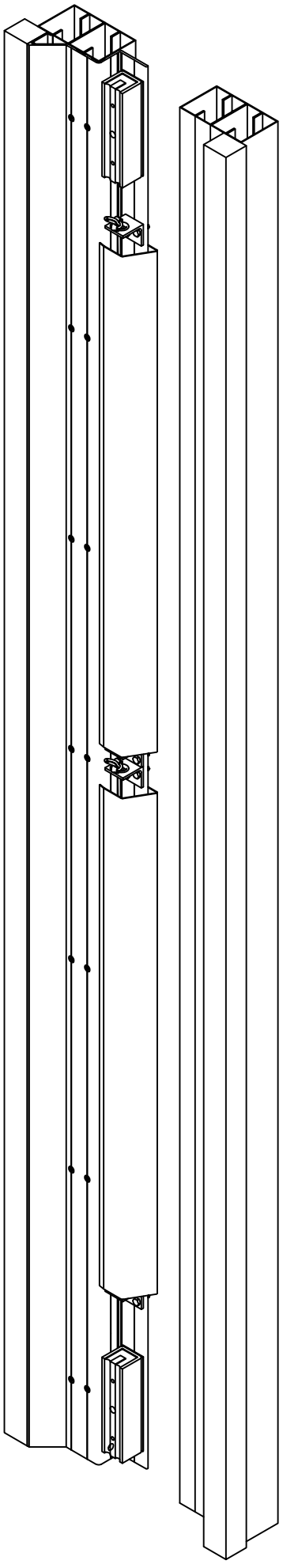

Note: If a water stop is required, ensure that it is positioned correctly before placing the EJC frame members.

1.1) Start the installation by inserting alignment pins into the top of the Control Frame Assembly.

1.2) Place the Control Frame Assembly in the left side blockout. Once the assembly is correctly positioned and it is plumb and square, secure the top and bottom of the Frame using the Construction Specialties supplied fasteners.

1.3) Continue the installation of the fasteners in each location in the front flange. The fastener locations are 6" [152.4mm] from the top and bottom of the frame and 18" [457.2mm] on center along the length.

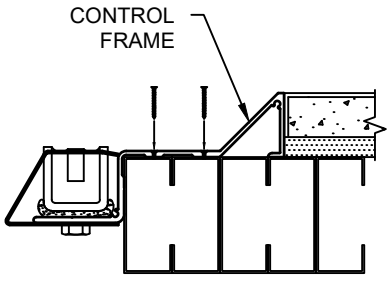

STEP 2

HINGE FRAME ASSEMBLY INSTALLATION

2.1) Start the installation of the Hinge Frame by inserting alignment pins in the top of the Frame.

2.2) Place the Hinge Frame Assembly in the right side blockout. Position the Frame so that the front edge is parallel and plumb to the front edge of the Control Frame Assembly. Once the assembly is properly positioned, secure the top and bottom of the Frame using the Construction Specialties supplied fasteners.

2.3) Continue the installation of the fasteners until all locations have been completed. The fastener locations are 6" [152.4mm] from the top and bottom of the Frame and 18" [457.2mm] on center along the length.

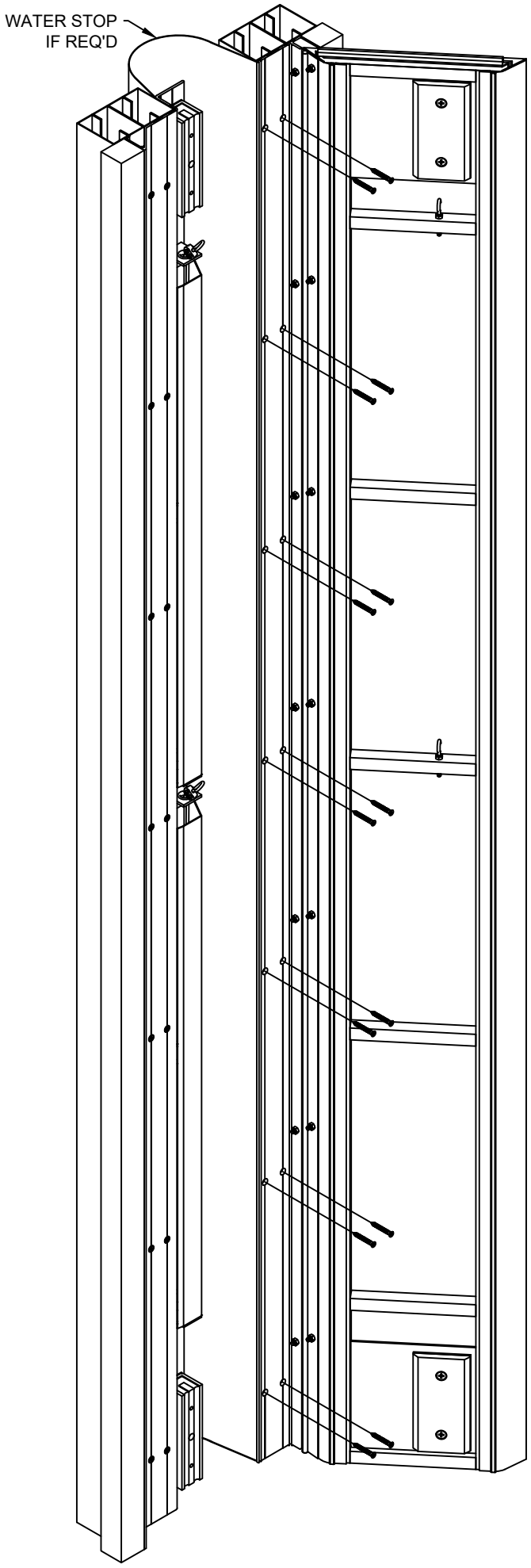

STEP 3

INSTALL SASH CORD

Once the Frames have been installed, the following steps must be performed to complete the installation:

3.1) Remove the protective cover from the magnets. Each XLS assembly contains two magnets. The magnets are located at the top and bottom of the Control Frame. After removing the protective cover, inspect the magnet for damage or debris. This surface must be clean. **Note: Do not let the door close on the magnets.**

3.2) Place a wood shim between the Door Frame and Control Frame and secure with duct tape to prevent the door from closing. The shims will prevent hands from getting pinched during the next step and will be removed when the installation is complete.
CAUTION: Each magnet has a pull force of 400 lbs. The shims MUST keep the door free from the magnets and prevent bodily injury.

3.3) Pull both of the sash cords to expose approximately 12" and secure with a clamp. Place the loops on the end of the sash cord over the eye bolts on the door.

3.4) Ensure that all work has been completed on the Frame installation and the joint area is clear of debris.

3.5) Remove the clamps on the sash cord and allow the door to close slowly against the wood shims.

3.6) Install the panel system on the outside of the Door Frame. When complete, the door will be resting against the wood shims. Remove the wood shims and allow the cover to snap to the closed position. The installation of the initial XLS assembly is now complete.

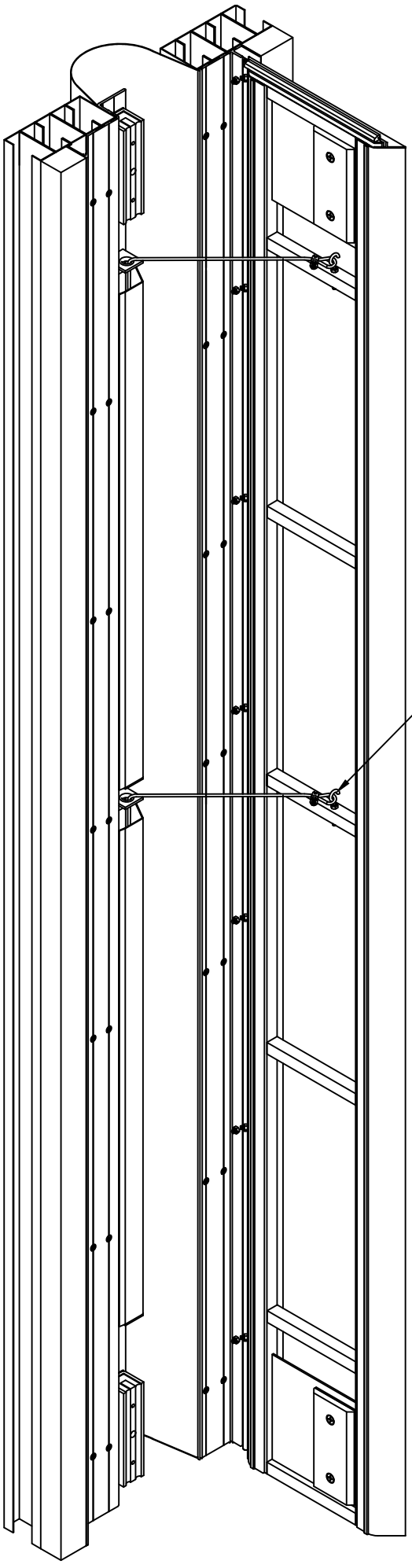

STEP 4

CONTINUE INSTALLATION

Continue installation of the remaining XLS systems by following these steps:

4.1) Install alignment pins into the top of another Control Frame.

4.2) Position the Control Frame on top of the existing Frame in the left side blockout. Make sure the alignment pins in the lower control Frame insert into the bottom of the upper Frame.

4.3) Check the alignment of the Frame to be sure it is square and plumb. Secure the top and bottom of the Frame with the Construction Specialties supplied fasteners.

4.4) Continue to install the remaining fasteners in the Control Frame as outlined in step 1.

4.5) Position the next Hinge Frame assembly on top of the existing Hinge Frame. Make sure the alignment pins in the lower Frame insert into the bottom of the upper Frame.

4.6) Check the alignment of the Frame to be sure it is square and plumb. Secure the top and bottom of the Frame with the Construction Specialties supplied fasteners.

4.7) Continue to install the remaining fasteners in the Hinge Frame as outlined in step 2.

4.8) Follow step 3 to install the sash cords.

4.9) Continue the installation of the remaining XLS covers by following steps 1 through 4.

